Suction Plates SPU

Suction area (Ø) from 100 mm to 400 mm

UNIVERSAL

Suction Plates SPU

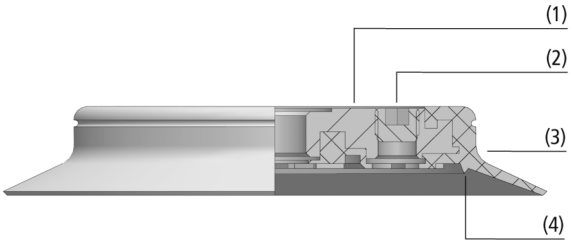

System design Suction Plates SPU

Suction plates SPU being used for handling shaped sheet metal parts

Suitability for industry specific applications

Application

- Round suction plate for handling of smooth, flat workpieces
- Series SPU B with thicker sealing lip: handling of workpieces with a slightly rough surface, such as wood or scaly metal sheets
- Series SPU AE with integrated peeling insert: handling of thin metal sheets (approx. 1.0 - 2.5 mm); overcomes the self-adhesion between the sheets
- Series SPU TV with touch valve: deactivation of unused suction cups to prevent the entry of unwanted air

Design

- Suction plate SPU consisting of sealing ring (3) and aluminum supporting plate (1)
- Sealing ring clipped securely onto supporting plate with positive locking
- Internal sealing edge (4) for better sealing on slightly rough surfaces
- Side vacuum connector (2) normally sealed with a plug (glued into position for extra safety)
- Series SPU TV: touch valve already installed
- Series SPU AE: peeling insert on the bottom side already installed

Product highlights

- Support surfaces on the bottom prevent permanent deformation of thin-walled workpieces
- Fastest cycle times thanks to low own volume
- Wide range of diameters for a large selection of different workpieces
- High suction force with small dimensions

© J. Schmalz GmbH / Reserve technical changes / generated on: 05.04.2025

Contact Schmalz: J. Schmalz GmbH, Johannes-Schmalz-Str. 1 • 72293 Glatten • +49 7443 2403-105 • kundencenter@schmalz.de

Suction Plates SPU

Suction area (Ø) from 100 mm to 400 mm

Designation code Suction Plates SPU

SPU	–	160	–	NBR-55	–	G1/2-IG	–	TV
1		2		3		4		5

1 – Abbreviated designation

Code	Version
SPU	Flat

2 – Suction area

Code	Diameter in mm
100…400	ø 100 to 400

3 – Material

Code	Material
NBR-55	Nitrile caoutchuc
SI-60	Silicone

4 – Connection

Code	Connection
G1/4-IG	G1/4-IG (IG = female (F))
G1/2-IG	G1/2-IG

5 – Product addition

Code	Type
AE	Peeling insert
B	Steep sealing lip
TV	Touch valve

Suction plate SPU (sealing ring + support plate) is delivered assembled. The assembly consists of:

- Sealing ring of type DR-SPU – elastomer part, available in various diameters
- Aluminum support plate, available with various threads
- Optional product addition: touch valve, steep sealing lip, peeling insert

Available spare parts: sealing ring DR-SPU, touch valve TV

Ordering data Suction Plates SPU

Type				Suction cup material with ShA: *	
				NBR-55	SI-60
SPU	100	G1/4-IG	-	10.01.01.01107	10.01.01.01108
SPU	125	G1/4-IG	-	10.01.01.01102	10.01.01.01103
SPU	125	G1/4-IG	AE	10.01.01.01159	10.01.01.01160
SPU	125	G1/4-IG	TV	10.01.01.01157	10.01.01.01158
SPU	160	G1/2-IG	-	10.01.01.01116	10.01.01.01117
SPU	160	G1/2-IG	AE	10.01.01.01155	10.01.01.01156
SPU	160	G1/2-IG	TV	10.01.01.01153	10.01.01.01154
SPU	210	G1/2-IG	-	10.01.01.01092	10.01.01.01093
SPU	210	G1/2-IG	AE	10.01.01.01151	10.01.01.01152
SPU	210	G1/2-IG	B	10.01.01.10552	-
SPU	210	G1/2-IG	TV	10.01.01.01149	10.01.01.01150
SPU	250	G1/2-IG	-	10.01.01.01097	10.01.01.01098
SPU	250	G1/2-IG	B	10.01.01.10589	-
SPU	250	G1/2-IG	TV	10.01.01.01209	10.01.01.01210
SPU	300	G1/2-IG	-	10.01.01.01134	10.01.01.01135
SPU	360	G1/2-IG	B	10.01.01.10588	-
SPU	400	G1/2-IG	-	10.01.01.01138	-

*Additional material specifications at beginning of the section "Vacuum Suction Cups"

Contact Schmalz: J. Schmalz GmbH, Johannes-Schmalz-Str. 1 • 72293 Glatten • +49 7443 2403-105 • kundencenter@schmalz.de

Suction Plates SPU

Suction area (Ø) from 100 mm to 400 mm

Ordering data Spare parts Suction Plates SPU

Type	Spare parts		Part no.
SPU 100 NBR-55 G1/4-IG	Sealing ring for SPU suction plate	DR-SPU 100 NBR-55	10.01.01.01104
SPU 100 SI-60 G1/4-IG	Sealing ring for SPU suction plate	DR-SPU 100 SI-60	10.01.01.01105
SPU 125 NBR-55 G1/4-IG	Sealing ring for SPU suction plate	DR-SPU 125 NBR-55	10.01.01.01099
SPU 125 NBR-55 G1/4-IG AE	Sealing ring for SPU suction plate	DR-SPU 125 NBR-55	10.01.01.01099
SPU 125 NBR-55 G1/4-IG TV	Sealing ring for SPU suction plate	DR-SPU 125 NBR-55	10.01.01.01099
SPU 125 SI-60 G1/4-IG	Sealing ring for SPU suction plate	DR-SPU 125 SI-60	10.01.01.01100
SPU 125 SI-60 G1/4-IG AE	Sealing ring for SPU suction plate	DR-SPU 125 SI-60	10.01.01.01100
SPU 125 SI-60 G1/4-IG TV	Sealing ring for SPU suction plate	DR-SPU 125 SI-60	10.01.01.01100
SPU 160 NBR-55 G1/2-IG	Sealing ring for SPU suction plate	DR-SPU 160 NBR-55	10.01.01.01111
SPU 160 NBR-55 G1/2-IG AE	Sealing ring for SPU suction plate	DR-SPU 160 NBR-55	10.01.01.01111
SPU 160 NBR-55 G1/2-IG TV	Sealing ring for SPU suction plate	DR-SPU 160 NBR-55	10.01.01.01111
SPU 160 SI-60 G1/2-IG	Sealing ring for SPU suction plate	DR-SPU 160 SI-60	10.01.01.01112
SPU 160 SI-60 G1/2-IG AE	Sealing ring for SPU suction plate	DR-SPU 160 SI-60	10.01.01.01112
SPU 160 SI-60 G1/2-IG TV	Sealing ring for SPU suction plate	DR-SPU 160 SI-60	10.01.01.01112
SPU 210 NBR-55 G1/2-IG	Sealing ring for SPU suction plate	DR-SPU 210 NBR-55	10.01.01.01089
SPU 210 NBR-55 G1/2-IG AE	Sealing ring for SPU suction plate	DR-SPU 210 NBR-55	10.01.01.01089
SPU 210 NBR-55 G1/2-IG B	Sealing ring for SPU suction plate	DR-SPU 210 NBR-55 B	10.01.01.10502
SPU 210 NBR-55 G1/2-IG TV	Sealing ring for SPU suction plate	DR-SPU 210 NBR-55	10.01.01.01089
SPU 210 SI-60 G1/2-IG	Sealing ring for SPU suction plate	DR-SPU 210 SI-60	10.01.01.01090
SPU 210 SI-60 G1/2-IG AE	Sealing ring for SPU suction plate	DR-SPU 210 SI-60	10.01.01.01090
SPU 210 SI-60 G1/2-IG TV	Sealing ring for SPU suction plate	DR-SPU 210 SI-60	10.01.01.01090
SPU 250 NBR-55 G1/2-IG	Sealing ring for SPU suction plate	DR-SPU 250 NBR-55	10.01.01.01094
SPU 250 NBR-55 G1/2-IG B	Sealing ring for SPU suction plate	DR-SPU 250 NBR-55 B	10.01.01.10579
SPU 250 NBR-55 G1/2-IG TV	Sealing ring for SPU suction plate	DR-SPU 250 NBR-55	10.01.01.01094
SPU 250 SI-60 G1/2-IG	Sealing ring for SPU suction plate	DR-SPU 250 SI-60	10.01.01.01095
SPU 250 SI-60 G1/2-IG TV	Sealing ring for SPU suction plate	DR-SPU 250 SI-60	10.01.01.01095
SPU 300 NBR-55 G1/2-IG	Sealing ring for SPU suction plate	DR-SPU 300 NBR-55	10.01.01.01131
SPU 300 SI-60 G1/2-IG	Sealing ring for SPU suction plate	DR-SPU 300 SI-55	10.01.01.01132
SPU 360 NBR-55 G1/2-IG B	Sealing ring for SPU suction plate	DR-SPU 360 NBR-55 B	10.01.01.10584
SPU 400 NBR-55 G1/2-IG	Sealing ring for SPU suction plate	DR-SPU 400 NBR-55	10.01.01.01136

Type			Spare parts		Part no.
SPU	125	TV	Touch Valve	TV G1/4-AG 13	10.05.10.00061
SPU	160	TV	Touch Valve	TV G1/4-AG 13	10.05.10.00061
SPU	210	TV	Touch Valve	TV G1/4-AG 13	10.05.10.00061
SPU	250	TV	Touch Valve	TV G1/2-AG 13	10.05.10.00038

Contact Schmalz: J. Schmalz GmbH, Johannes-Schmalz-Str. 1 • 72293 Glatten • +49 7443 2403-105 • kundencenter@schmalz.de

Suction Plates SPU

Suction area (Ø) from 100 mm to 400 mm

Technical data Suction Plates SPU

Type			Suction force (-600 mbar) [N]*	Suction force d2 [N]**	Volume [cm³]	Workpiece radius min. (convex) [mm]	Hose inner diameter (recom.) d [mm]***
SPU	100	-	425	185	45	130	9
SPU	125	-	660	365	76	220	9
SPU	125	AE	660	365	77	-	9
SPU	125	TV	660	365	76	220	9
SPU	160	-	1,090	600	142	350	12
SPU	160	AE	1,090	600	151	-	12
SPU	160	TV	1,090	600	142	350	9
SPU	210	-	1,870	1,250	226	750	12
SPU	210	AE	1,870	1,250	194	-	12
SPU	210	B	1,870	1,190	321	750	12
SPU	210	TV	1,870	1,250	192	750	9
SPU	250	-	2,650	1,940	370	2,200	12
SPU	250	B	2,650	1,940	512	1,500	12
SPU	250	TV	2,650	1,940	371	2,200	12
SPU	300	-	3,810	3,010	491	3,500	12
SPU	360	B	5,500	4,730	1,289	3,000	12
SPU	400	-	6,780	5,870	890	6,500	12

*The specified suction forces are theoretical values at a vacuum of -0.6 bar and with a smooth, dry workpiece surface - they do not include a safety factor
**Suction force referred to the sealing-edge diameter d2
***The recommended hose diameter is based on a hose length of approx. 2 m

Contact Schmalz: J. Schmalz GmbH, Johannes-Schmalz-Str. 1 • 72293 Glatten • +49 7443 2403-105 • kundencenter@schmalz.de

Suction Plates SPU

Suction area (Ø) from 100 mm to 400 mm

Design data Suction Plates SPU

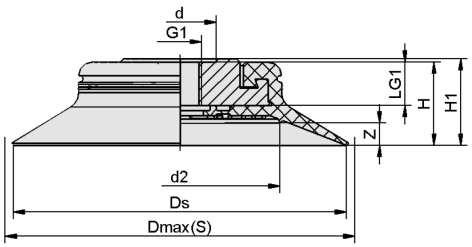

SPU 100

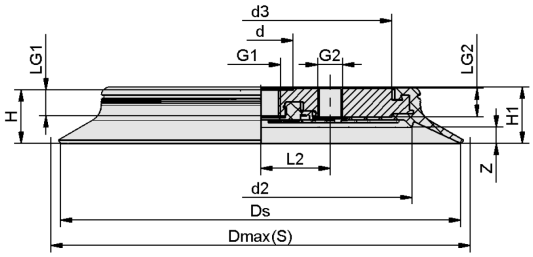

SPU 125 - 400 (B)

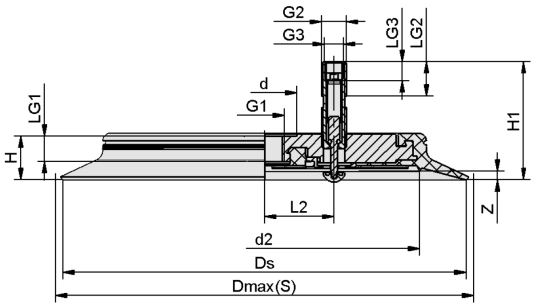

SPU 125 - 250 TV

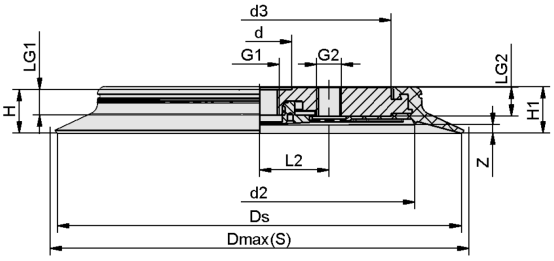

SPU 125 - 210 AE

Contact Schmalz: J. Schmalz GmbH, Johannes-Schmalz-Str. 1 • 72293 Glatten • +49 7443 2403-105 • kundencenter@schmalz.de

Suction Plates SPU

Suction area (Ø) from 100 mm to 400 mm

Design data Suction Plates SPU

Type*				d [mm]	d2 [mm]	d3 [mm]	Dmax(S) [mm]**	Ds [mm]	G1	G2	G3	H [mm]	H1 [mm]	L2 [mm]	LG1 [mm]	LG2 [mm]	LG3 [mm]	Z (Stroke) [mm]
SPU	100	G1/4-IG	-	22	60	-	108	100	G1/4"-F	-	-	24.5	25.5	-	13.0	-	-	8
SPU	100	G1/4-IG	-	22	60	-	108	100	G1/4"-F	-	-	25.0	26.0	-	13.0	-	-	7
SPU	125	G1/4-IG	-	22	85	61.0	132	125	G1/4"-F	G1/4"-F	-	24.5	25.5	22.0	13.0	14	-	8
SPU	125	G1/4-IG	-	22	83	61.0	132	125	G1/4"-F	G1/4"-F	-	25.0	26.0	22.0	13.0	14	-	7
SPU	125	G1/4-IG	AE	22	83	61.0	132	125	G1/4"-F	G1/4"-F	-	24.5	25.5	22.0	13.0	14	-	8
SPU	125	G1/4-IG	AE	22	83	61.0	132	125	G1/4"-F	G1/4"-F	-	25.0	26.0	22.0	13.0	14	-	7
SPU	125	G1/4-IG	TV	22	83	-	132	125	G1/4"-F	G1/4"-M	G1/8"-F	24.5	25.5	22.0	13.0	36	7	8
SPU	160	G1/2-IG	AE	34	113	88.0	170	160	G1/2"-F	G1/4"-F	-	24.5	26.0	36.5	13.5	15	-	8
SPU	160	G1/2-IG	AE	34	113	88.0	170	160	G1/2"-F	G1/4"-F	-	25.0	26.5	36.5	13.5	15	-	7
SPU	160	G1/2-IG	TV	34	113	-	170	160	G1/2"-F	G1/4"-M	G1/8"-F	24.5	26.0	36.5	13.5	18	10	8
SPU	210	G1/2-IG	-	34	163	138.0	220	210	G1/2"-F	G1/4"-F	-	25.5	27.0	36.5	13.5	15	-	8
SPU	210	G1/2-IG	AE	34	163	138.0	220	210	G1/2"-F	G1/4"-F	-	25.5	27.0	36.5	13.5	15	-	8
SPU	210	G1/2-IG	B	34	159	138.0	220	210	G1/2"-F	G1/4"-F	-	29.0	29.5	36.5	13.5	15	-	10
SPU	210	G1/2-IG	TV	34	163	-	220	210	G1/2"-F	G1/4"-M	G1/8"-F	25.5	27.0	36.5	13.5	38	10	8
SPU	250	G1/2-IG	-	34	203	178.0	263	252	G1/2"-F	G1/2"-F	-	25.0	26.5	76.0	13.5	15	-	7
SPU	250	G1/2-IG	TV	34	203	-	263	252	G1/2"-F	G1/2"-M	G3/8"-F	25.0	65.5	76.0	13.5	39	12	7
SPU	250	G1/2-IG	-	34	203	178.0	265	250	G1/2"-F	G1/2"-F	-	25.0	26.5	76.0	13.5	15	-	7
SPU	250	G1/2-IG	B	34	203	178.0	265	252	G1/2"-F	G1/2"-F	-	29.0	30.5	76.0	13.5	15	-	12
SPU	300	G1/2-IG	-	34	253	226.5	320	300	G1/2"-F	G1/2"-F	-	25.0	26.5	76.0	13.5	15	-	6
SPU	360	G1/2-IG	B	-	309	275.0	385	360	G1/2"-F	G1/2"-F	-	35.0	35.5	86.0	17.0	17	-	12
SPU	400	G1/2-IG	-	-	349	315.0	430	400	G1/2"-F	G1/2"-F	-	28.5	29.0	86.0	15.5	17	-	6

*Acceptable dimensional tolerances for rubber parts concerning to DIN ISO 3302-1 E3
**External dimension of the suction cup when it is pressed against the workpiece by the vacuum

Contact Schmalz: J. Schmalz GmbH, Johannes-Schmalz-Str. 1 • 72293 Glatten • +49 7443 2403-105 • kundencenter@schmalz.de